REV	DESCRIPTION	CHANGE BY	DATE
A1	新增6.5十字开口	段阳阳	2024.04.27

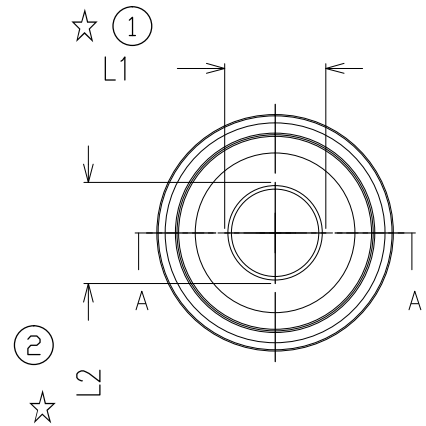

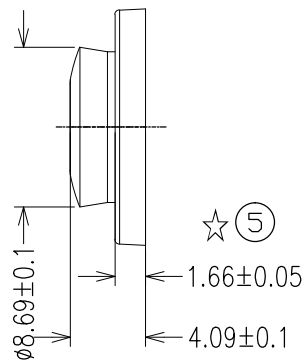

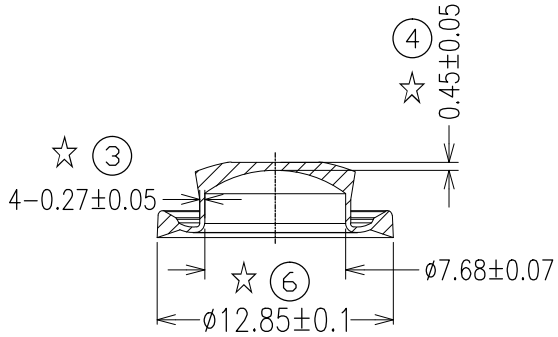

SECTION A-A

序号	阀口规格	阀口尺寸管控值
1	十字开口5.5×5.5	L1=5.5±0.3; L2=5.5±0.3
2	十字开口6.5×6.5	L1=6.5±0.3; L2=6.5±0.3
3		
4		

备注:

1. 材质：液态气相胶
2. 硬度：40度
3. 颜色;透明
4. 有"☆"标示为管控尺寸
5. 冲切口不能有冲斜、冲不断、披锋、毛刺等不良

Unspecific Tolerance:			
XX.	±0.1	XX.	±1°
XX.X	±0.05	XX.X	±0.5°
XX.XX	±0.02	XX.XX	±0.25°
XX.XXX	±0.005		

PROJECT: PROJECT		DESIGNED BY	DESIGNED
PRODUCT NAME: PRODUCT		APPROVED BY	APPROVED
MOULD NO: MOULD	CUSTOMER: CUSTOMER	DATE:	DATE
MATERIAL: MATERIAL	UNIT: MM	THIRD ANGLE PROJECTION	
SHRINKAGE: SHRINKAGE	SCALE: SCALE	SHEET NO:	SHEEI 1 OF 1